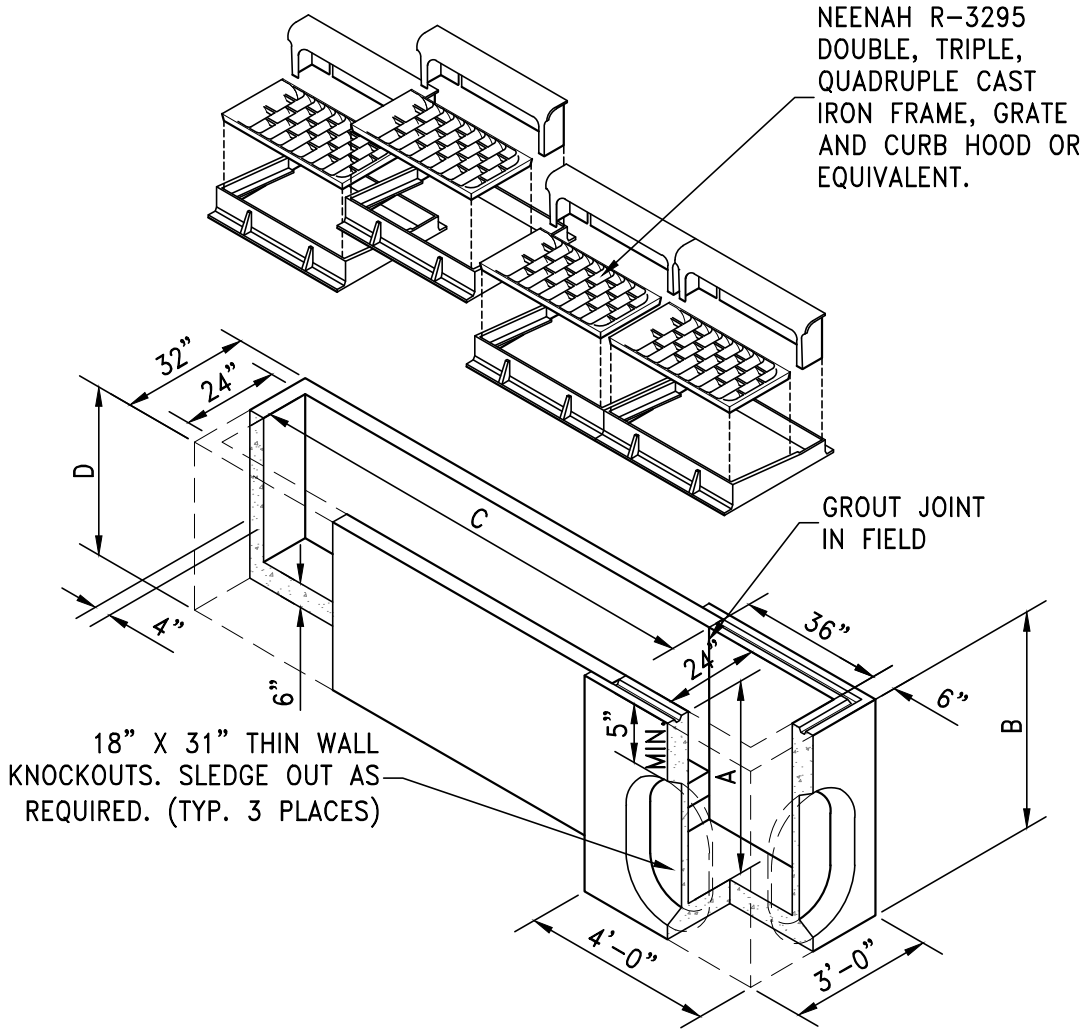

NOTES:

1. A HIGH CAPACITY CURB INLET SHALL BE USED WHEN DESIGN FLOW RATES EXCEED THE CAPACITY OF A SINGLE CATCH BASIN.

2. FOR DIMENSIONS, NOTES, AND DETAILS NOT SHOWN, REFER TO THE APPLICABLE CATCH BASIN DETAIL DRAWINGS.

	STANDARD DETAILS FOR PUBLIC WORKS CONSTRUCTION	DRAWING No.	
RENO	HIGH CAPACITY CURB INLET	R-207A	
		APPROVED BY: JF	DATE:12/2019